Anglo-Chinese School (Junior)

SEMESTRAL ASSESSMENT (2021)

PRIMARY 5

MATHEMATICS

PAPER 1

Booklet A

Thursday **28 October 2021** **1 h**

Name: _____ ( ) Class: 5.( )

INSTRUCTIONS TO PUPILS

1 Do not turn over the pages until you are told to do so.

2 Follow all instructions carefully.

3 Answer ALL questions.

4 Shade your answers in the Optical Answer Sheet (OAS) provided.

5 You are **not** allowed to use a calculator for this paper.

This question paper consists of 7 printed pages (inclusive of cover page).

Questions 1 to 10 carry 1 mark each. Questions 11 to 15 carry 2 marks each.
For each question, four options are given. One of them is the correct answer. Make your choice (1, 2, 3 or 4). Shade the correct oval (1, 2, 3 or 4) on the Optical Answer Sheet (OAS). (20 marks)

1. Find the value of 450 000 ÷ 5000.

(1) 9
(2) 90
(3) 900
(4) 9000

2. Round 24 595 to the nearest thousand.

(1) 24 000
(2) 24 500
(3) 24 600
(4) 25 000

3. Which of the following is the same as 2.04 km?

(1) 2 km 4 m
(2) 2 km 40 m
(3) 2 km 400 m
(4) 2 km 4000 m

4. Which of the following is the same as 8 ÷ 5?

(1) $1 \times \frac{3}{5}$
(2) $\frac{1}{8} \times \frac{1}{5}$
(3) $5 \times \frac{1}{8}$
(4) $\frac{8}{1} \times \frac{1}{5}$

5. Which of the following fractions is greater than $\frac{1}{2}$?

(1) $\frac{5}{11}$

(2) $\frac{9}{17}$

(3) $\frac{10}{21}$

(4) $\frac{12}{24}$

6. Arrange the following numbers in order from the smallest to the largest.

4.103 4.013 4.13 4.031

(1) 4.13, 4.103, 4.031, 4.013

(2) 4.031, 4.013, 4.13, 4.103

(3) 4.013, 4.13, 4.031, 4.103

(4) 4.013, 4.031, 4.103, 4.13

7. The figure below consists of 4 straight lines. All the 5 marked angles have different values.

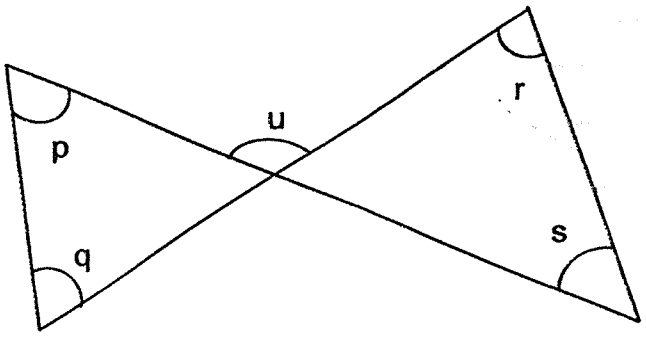

Which of the following is **true**?

(1) $\angle p + \angle q + \angle u = 180^\circ$

(2) $\angle p + \angle r + \angle s = 180^\circ$

(3) $\angle p + \angle r = \angle q + \angle s$

(4) $\angle p + \angle q = \angle r + \angle s$

8. Find the area of triangle ABC as shown in the figure below.

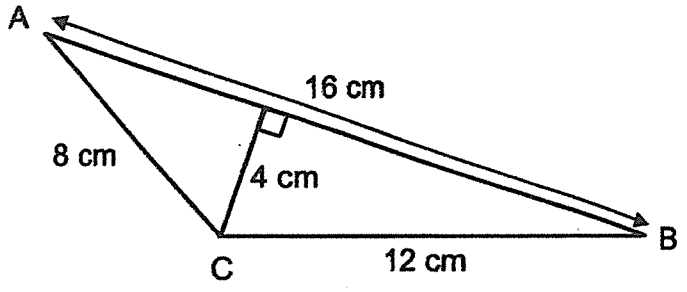

(1) 24 cm^2

(2) 32 cm^2

(3) 48 cm^2

(4) 64 cm^2

9. There are 12 apples and 48 oranges in a box. What percentage of the fruits are oranges?

(1) 20%

(2) 25%

(3) 75%

(4) 80%

10. The graph below shows the amount of money saved by 4 boys in October.

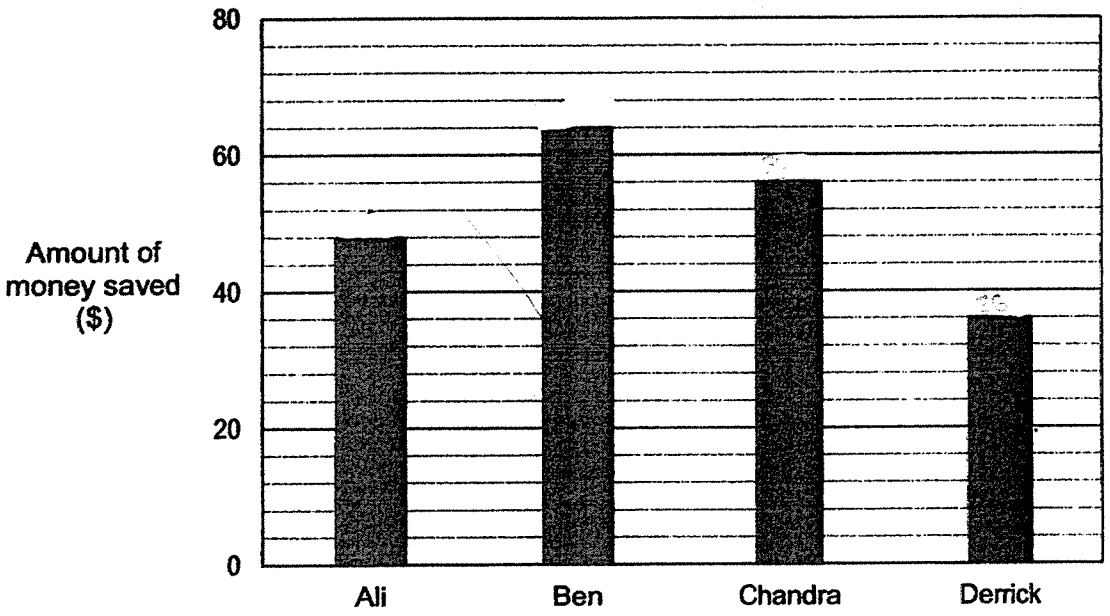

Find the average amount of money saved by the 4 boys in October.

(1) $36

(2) $48

(3) $51

(4) $64

11. A tailor can make 42 similar shirts in 8 days. At this rate, how many shirts can he make in 20 days?

1) 100

2) 105

3) 120

4) 126

12. In the figure below, ABCD is a rectangle with a perimeter of 24 cm. The length of the rectangle is 3 times its breadth. Find the area of rectangle ABCD.

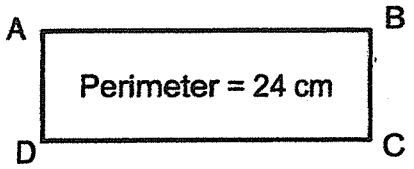

(1) 27 cm^2

(2) 72 cm^2

(3) 108 cm^2

(4) 192 cm^2

13. Alice and Carl shared the total cost of a present. Alice paid \$18 more than $\frac{3}{8}$ of the total cost of the present. Carl paid \$42. How much was the cost of the present?

(1) \$64

(2) \$80

(3) \$96

(4) \$120

14. Mr Ahmad planted 10 seedlings in a row on one side of the road at equal distances apart as shown below. The distance between the 1st seedling and the 10th seedling is 18.54 m. What is the distance between the 3rd seedling and the 7th seedling?

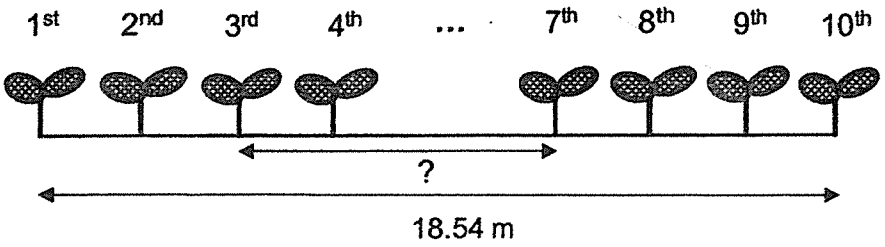

(1) 6.18 m

(2) 7.416 m

(3) 8.24 m

(4) 10.4 m

15. Adrian was standing at a point facing his home at first.

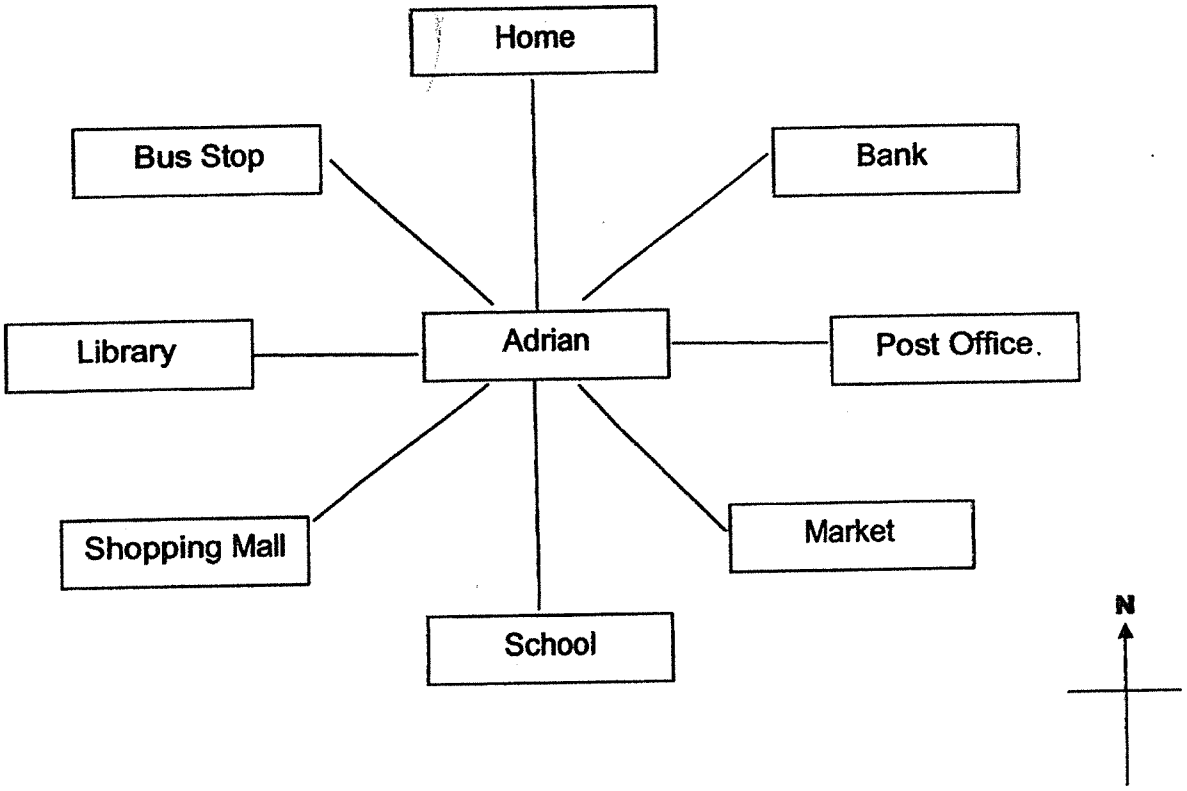

He then took the following steps.

Step 1 : He turned to face West.

Step 2 : He turned 135° anticlockwise.

Step 3 : He turned 90° clockwise.

Where was Adrian facing in the end?

(1) Bank

(2) Market

(3) Bus Stop

(4) Shopping Mall

END OF BOOKLET A

Anglo-Chinese School (Junior)

SEMESTRAL ASSESSMENT (2021)

PRIMARY 5

MATHEMATICS

PAPER 1

Booklet B

Thursday **28 October 2021** **1 h**

Name: _____ .( ) Class: 5.( )

INSTRUCTIONS TO PUPILS

1 Do not turn over the pages until you are told to do so.

2 Follow all instructions carefully.

3 Answer ALL questions.

4 You are **not** allowed to use a calculator for this paper.

This question paper consists of 9 printed pages (inclusive of cover page).

Questions **16** to **20** carry 1 mark each. Write your answers in the spaces provided. For questions which require units, give your answers in the units stated. (5 marks)

---

16. Find the value of $81 + 12 \div 3 \times (20 - 6)$.

Ans: _____

17. Express $2\frac{6}{7}$ as a decimal. Give your answer correct to 2 decimal places.

Ans: _____

18. Use a protractor to measure and write down the size of ∠g in the figure.

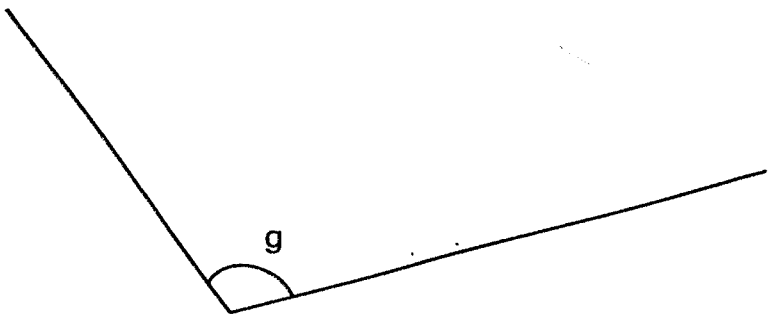

Ans: _____ °

Sub-Total : [ ]

19. Amy has some beads. The ratio of the number of red beads to the number of blue beads is 3 : 7. She has 18 red beads. How many blue beads does Amy have?

Ans: _____

20. A rectangular tank, 20 cm by 10 cm by 15 cm, is filled with water to a height of 8 cm. Find the amount of water in the tank. Give your answer in litres.

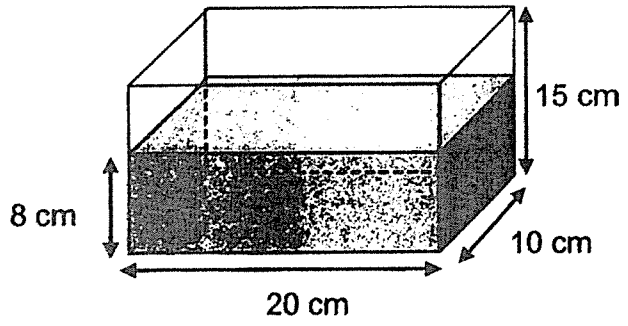

Ans: _____ ℓ

Sub-Total : [ ]

Questions **21** to **30** carry 2 marks each. Show your working clearly and write your answers in the spaces provided. For questions which require units, give your answers in the units stated. (20 marks)

21. The following grid shows the positions of letters, **H, J, M** and **R**. Study the grid carefully and answer questions 21(a) and 21(b).

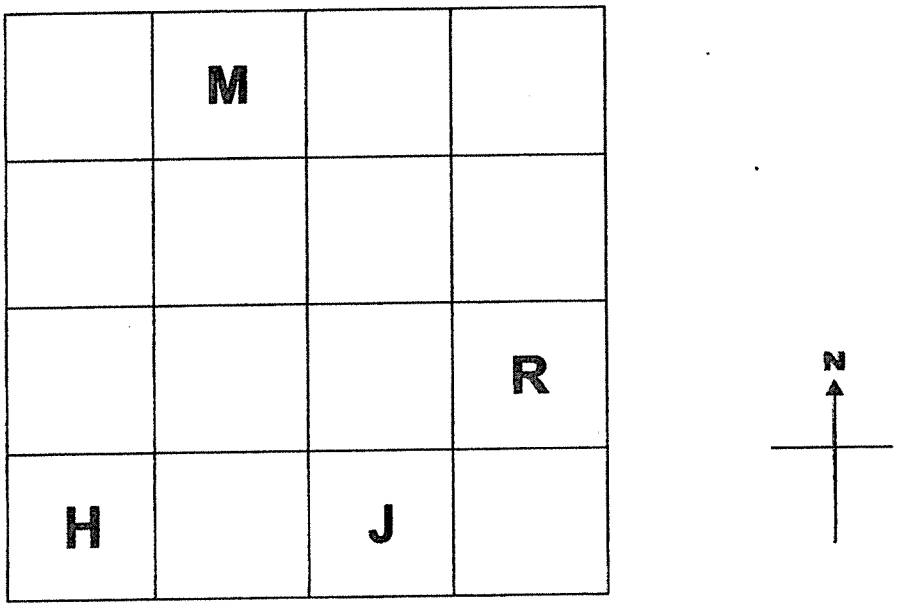

In the square grid,

(a) point J is east of point _____.

(b) point M is _____ of point R.

Ans: (a) _____

(b) _____

Sub-Total : [ ]

22. Joshua bought a mobile phone for $800. He had to pay 7% GST on $800. How much was the GST?

Ans: $ _____

23. At a bookshop, pens are sold in packs of three and rulers are sold in packs of four. The cost of a pack of pens is the same as the cost of a pack of rulers. Miss Koh paid $30 for 20 such rulers. What was the cost of a pack of pens?

Ans: $ _____

Sub-Total : [ ]

24. The figure shows a rectangular glass box filled with some unit cubes. How many **more** unit cubes are needed to fill the box completely?

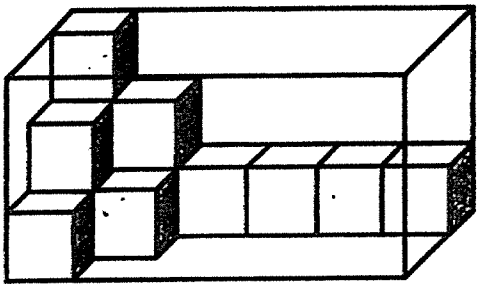

Ans: _____

25. The rental rates for a pair of skates are shown in the table below.

Time	Charge
First 2 hours	$5
Subsequent $\frac{1}{2}$ hour or part thereof	$1.20

Hui Wen rented a pair of skates from 9.30 a.m. to 12.45 p.m. How much did she pay?

Ans: $_ _____

Sub-Total : [ ]

26. In the figure below, AOB is a straight line and ∠DOE is a right angle. ∠AOC = 34° and ∠BOE = 42°. Find ∠COD.

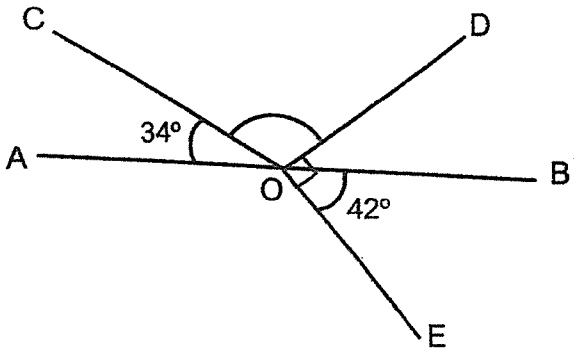

Ans: _____°

27. James had $\frac{3}{4}$ ℓ of apple juice. He gave $\frac{1}{2}$ of the apple juice to his sister and drank $\frac{2}{3}$ of the remaining apple juice. How many litres of apple juice did he drink? Give your answer as a fraction in litres.

Ans: _____ ℓ

Sub-Total : [ ]

28. Jack had $20 more than Tim. After Jack gave $32 to Tim, Tim had 3 times as much money as Jack. How much money did Jack have at first?

Ans: $ _____

29. Mrs Wang bought some curry puffs and mini tarts for her children. 3 curry puffs cost twice as much as 7 mini tarts. She paid a total of $19.50 for 3 curry puffs and 16 mini tarts. What is the cost of 1 mini tart?

Ans: $_____

Sub-Total :

30. Mr Chia sold 3 types of muffins in his bakery. He sold blueberry, chocolate and vanilla muffins. The line graph below shows the average number of the 3 types of muffins he sold over 5 days.

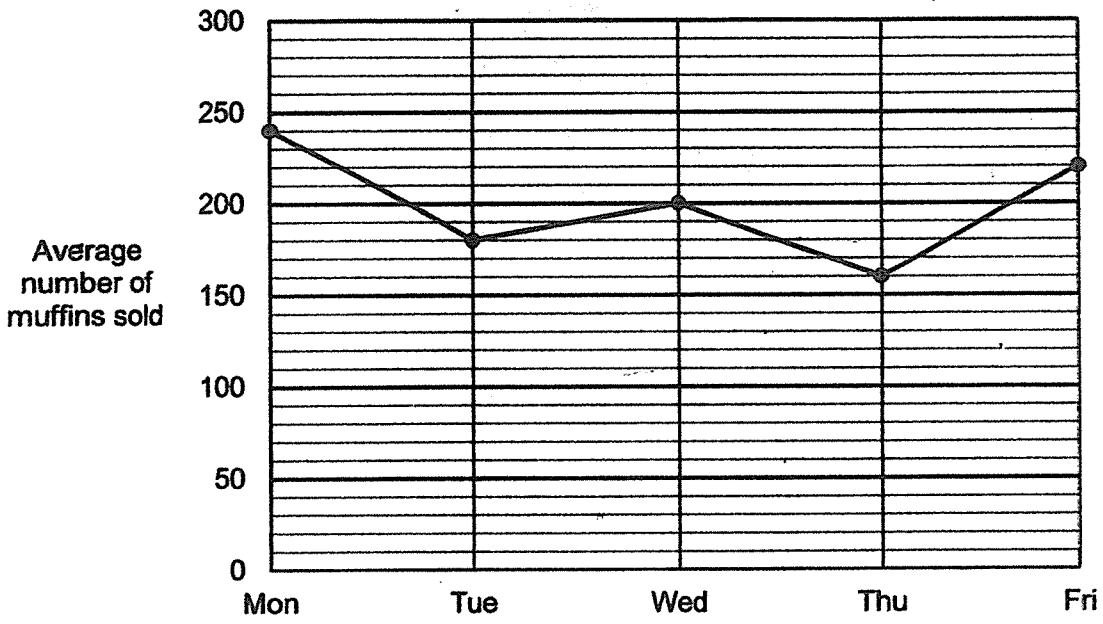

Each statement below is either true, false or not possible to tell from the information given above. For each statement, put one tick (✓) in the correct column.

Statement	True	False	Not possible to tell
The greatest decease in the average number of muffins sold is from Wednesday to Thursday.			
Mr Chia sold the least number of muffins on Thursday.			
Mr Chia sold more chocolate muffins on Monday than on Tuesday.			

END OF BOOKLET B

Sub-Total :

Anglo-Chinese School (Junior)

SEMESTRAL ASSESSMENT (2021)

PRIMARY 5

MATHEMATICS

PAPER 2

Thursday **28 October 2021** **1 h 30 min**

Name: _____ ( )

Class: 5.( )

INSTRUCTIONS TO PUPILS

1 Do not turn over the pages until you are told to do so.

2 Follow all instructions carefully.

3 Answer ALL questions.

4 You can use a calculator for this paper.

Paper	Booklet	Possible Marks	Marks Obtained
1	A	20	
	B	25	
2		55	
Total		100	

This question paper consists of 15 printed pages (inclusive of cover page).

Questions 1 to 5 carry 2 marks each. Show your working clearly and write your answers in the spaces provided. For questions which require units, give your answers in the units stated. (10 marks)

1. Jolene and Karen take 20 minutes to type a total of 2380 words. Karen can type 65 words per minute. How many words can Jolene type in one minute?

Ans: _____

2. Mrs Tan bought a wallet, a dress and a pair of shorts for $158. The wallet cost $24.05 more than the dress. The pair of shorts cost $15.60 less than the dress. Find the cost of the pair of shorts.

Ans: $ _____

Sub-Total : [ ]

3. Sebastian had 54 candies and 42 lollipops. He packed them into goodie bags with no remainder. Each goodie bag had candies and lollipops. He packed the same number of candies into each goodie bag. The number of lollipops in each goodie bag was the same. What was the greatest possible number of goodie bags he can pack?

Ans: _____

4. Charles and Dylan bought a total of 304 ice-cream sticks to build a model. Charles used $\frac{3}{5}$ of his ice-cream sticks and Dylan used $\frac{1}{3}$ of his ice-cream sticks. In the end, they had the same number of ice-cream sticks left. How many ice-cream sticks did Charles buy at first?

Ans: _____

Sub-Total : [ ]

5. The table shows the results obtained by Wei Ming during his examination. Part of the marks is covered by ink blots.

Class	Score
English	75
Mathematics	89
Chinese	6
Science	

The average marks for the 4 subjects is 72. What is the **largest possible mark** for Wei Ming's Science?

Ans: _____

Sub-Total : [ ]

For Questions **6** to **17**, show your working clearly and write your answers in the spaces provided. The number of marks available is shown in brackets [ ] at the end of each question or part-question. (45 marks)

---

6. Mr Chen had 120 markers. 35% of his markers were blue and rest were green. How many more green markers than blue markers did Mr Chen have?

Ans : _____ [3]

7. A rectangular container measuring 30 cm by 20 cm by 25 cm was fully filled with water. Peter poured water from the container into bottles without spilling. The capacity of each bottle was 0.8 litres. How much water was left in the container after Peter had completely filled up as many bottles as possible?

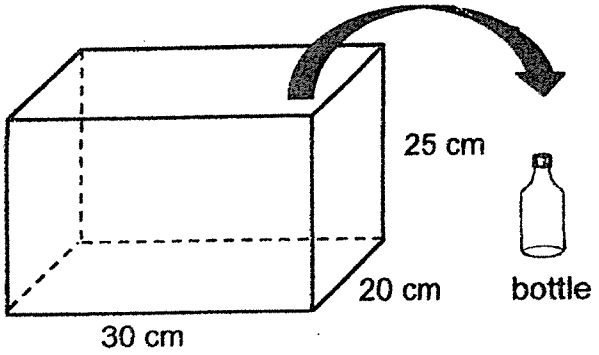

Ans: _____ [3]

Sub-Total : [ ]

8. The bar graph below shows the number of old textbooks donated by five Primary 5 classes to a children's home.

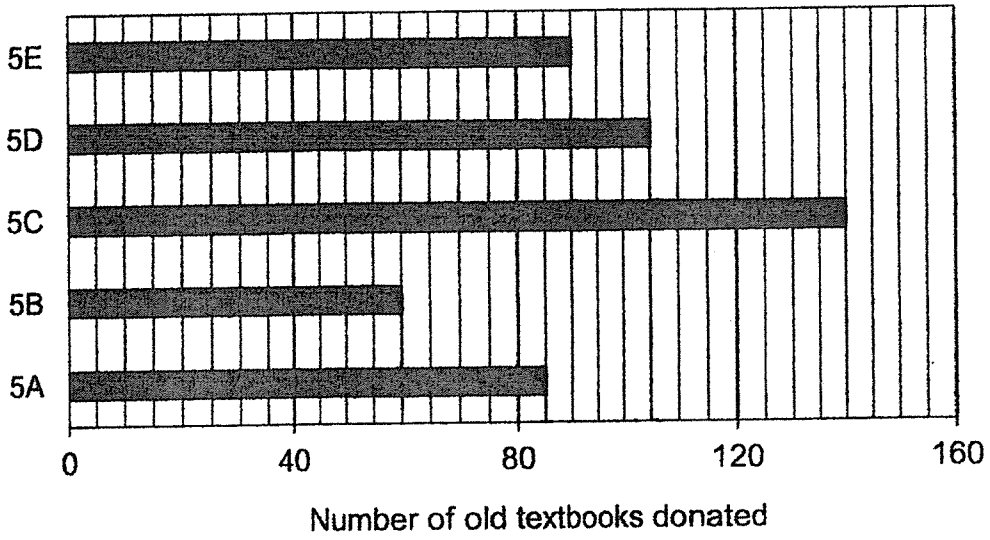

(a) What fraction of the old textbooks was donated by class 5E? Give your answer in the simplest form.

(b) There are 38 pupils in class 5C. Each pupil in class 5C donated either 3 or 5 old textbooks. How many pupils donated 3 textbooks?

Ans: (a) _____ [1]

(b) _____ [2]

Sub-Total :

9. In the figure below, PQ, PRS and QTR are straight lines. TR = RS. Find ∠QTS.

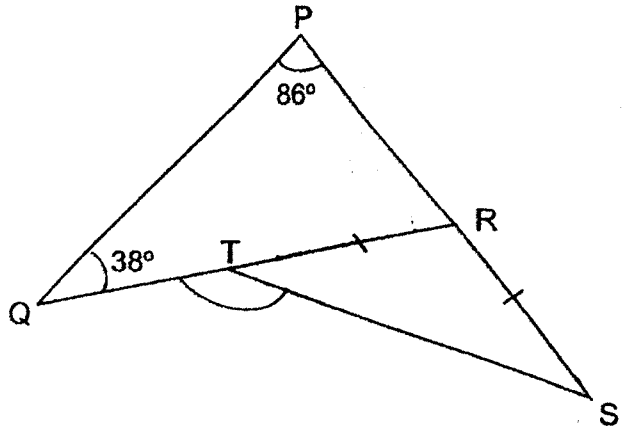

Ans: _____ [3]

Sub-Total : [ ]

10. At a party, there were twice as many children as adults. Of the children, there were 3 times as many girls as boys.

(a) What was the ratio of the number of adults to the number of girls to the number of boys?

(b) Each adult ate 2 pieces of chicken wings and each child ate 5 pieces of chicken wings. All the adults and children ate a total of 216 pieces of chicken wings. How many children were at the party?

Ans: (a)_____ [1]

(b) _____ [3]

Sub-Total : [ ]

11. In the figure below, PQR and STU are equilateral triangles. VQTW is a straight line. $\angle PQV = 94^\circ$ and $\angle UTW = 63^\circ$.

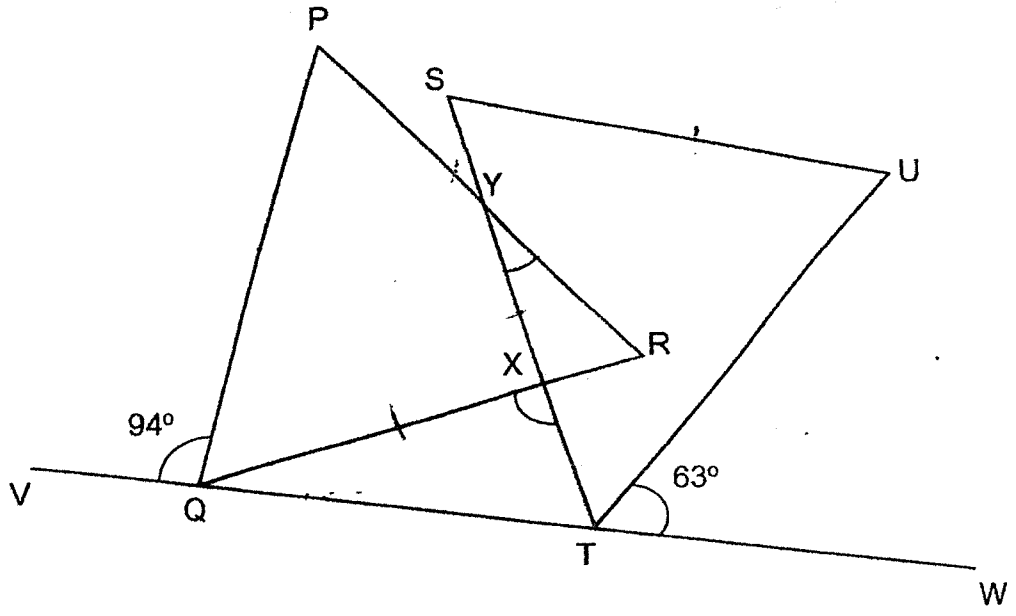

(a) Find $\angle QXT$.

(b) Find $\angle XYR$.

Ans: (a) _____ [2]

(b) _____ [2]

Sub-Total :

12. A school had 800 concert tickets for sale from Monday to Sunday. The graph below shows the number of tickets that were left unsold at the end of each day from Monday to Saturday.

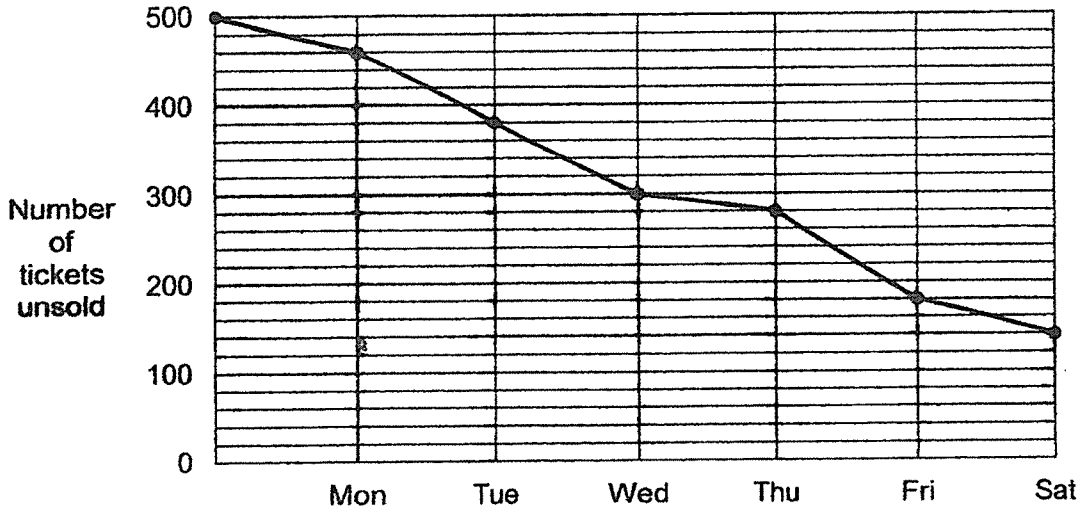

(a) On which day did the school sell the most number of tickets?

(b) On Sunday, the school held a special promotion to sell all the remaining tickets. For every 5 tickets bought, the 6th ticket was given free. Each ticket was sold for $15. What was the least amount of money the school collected from selling all the remaining tickets on Sunday?

Ans: (a) _____ [1]

(b) _____ [3]

Sub-Total : [ ]

13. Winnie had some money. She wanted to buy two types of bottles, large and small, for the lemonade she made. She paid $24.50 for 3 large bottles and 5 small bottles. With the remaining money, she could not buy another large bottle as she was short of $0.90. She then bought another small bottle and had $1.40 left.

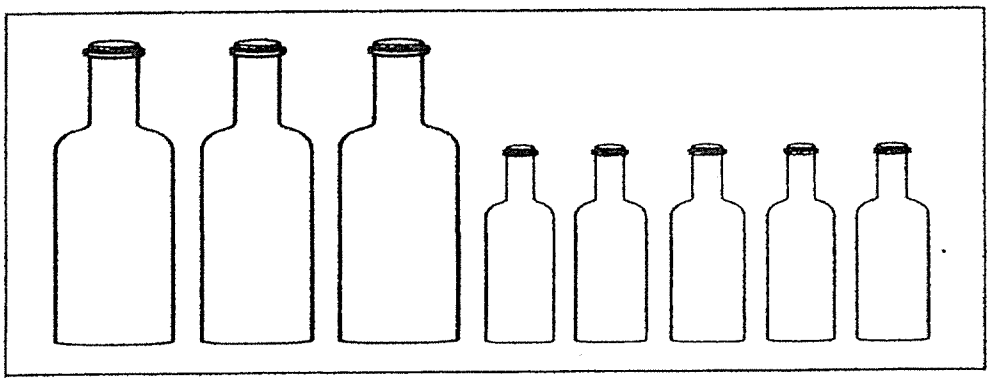

(a) How much more did each large bottle cost than each small bottle?

(b) How much money did Winnie have at first?

Ans : (a)_____ [1]

(b)_____ [3]

Sub-Total :

14. In the figure below, ADC and ABF are 2 **overlapping identical right-angled** triangles. CDE and EF are straight lines. **BC = 8 cm and CD = 10** cm. The area of triangle ABG is 34 cm^2. Find the total area of the shaded parts in the figure.

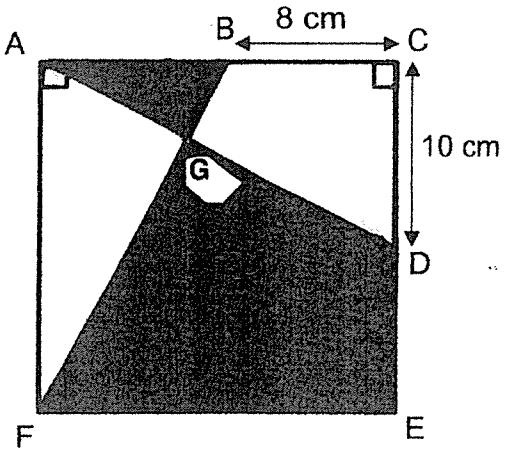

Ans: _____ [4]

Sub-Total :

15. Jamie has some 50¢ coins and Kumar has some $1 coins. Jamie has 12 more coins than Kumar. The total amount of money Kumar has is $15 more than the total amount of money Jamie has. How many coins does Kumar have?

Ans: _____ [3]

Sub-Total :

16. Mrs Li baked a total of 320 strawberry tarts and peach tarts. $\frac{2}{5}$ of them were peach tarts. She gave away 42 peach tarts and $\frac{3}{4}$ of the strawberry tarts to her neighbours.

(a) How many strawberry tarts did Mrs Li give to her neighbours?

(b) She then gave some of the remaining strawberry tarts and peach tarts to her brother. In the end, $\frac{3}{8}$ of the tarts Mrs Li had baked was left. How many tarts did she give to her brother?

Ans :(a) _____ [2]

(b) _____ [3]

Sub-Total : [ ]

17. Dots and matchsticks are used to form figures that follow a pattern as shown below.

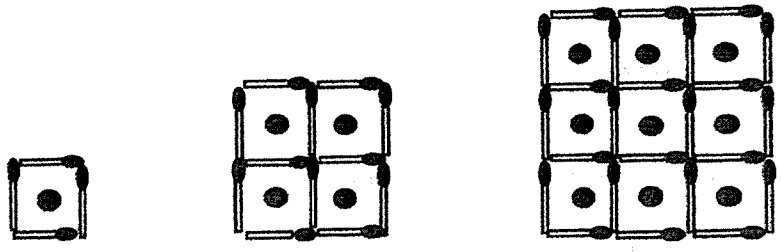

Figure 1 Figure 2 Figure 3

(a) Fill in the table for Figure 4.

Figure Number	Number of dots	Number of matchsticks
1	1	4
2	4	12
3	9	24
4	_____	_____

[1]

(b) How many dots will there be in Figure 12?

(c) Another figure in the pattern has 220 matchsticks. What is the figure number?

Ans :(a) _____ [2]

(b) _____ [2]

END OF PAPER 2

Sub-Total :

ANSWER KEY

YEAR : 2021
LEVEL : Primary 5
SCHOOL : Anglo-Chinese School
SUBJECT : MATHEMATICS
TERM : Semestral Assessment

BOOKLET A (PAPER 1)

Q1	2	Q2	4	Q3	2	Q4	4	Q5	2
Q6	4	Q7	4	Q8	2	Q9	4	Q10	3
Q11	2	Q12	1	Q13	3	Q14	3	Q15	4

BOOKLET B (PAPER 1)

Q16	137	Q17	2.86
Q18	$112°$	Q19	$18 \div 3 = 6$ $6 \times 7 = 42$
Q20	$8 \times 10 \times 20 = 1600$ $1600cm^3 = 1.6\ell$	Q21	(a) H (b) North-East
Q22	$\frac{7}{100} \times 800 = 56$	Q23	$20 \div 4 = 5$ $30 \div 5 = 6$
Q24	$9 \times 6 = 54$ 54-13=41	Q25	5+1.20+1.20+1.20=8.60
Q26	$90° - 42° = 48°$ $180° - 48° - 34° = 98°$	Q27	$\frac{3}{4} = \frac{6}{8}$ $\frac{6}{8} \div 2 = \frac{3}{8}$
Q28	34+12=44 $44 \div 2 = 22$ 22+32=54	Q29	$7 \times 2 = 14$ 14+16=30 $19.50 \div 30 = 0.65$
Q30	False Trune Not possible to tell		

PAPER 2

Q1	$65 \times 20 = 1300$ 2380-1300=1080 $1080 \div 20 = 54$	Q2	$(15.60 \times 2) + 24.05 = 55.25$ 158-55.25=102.75 $102.75 \div 3 = 34.25$

Q3	6 goodie bags $54 \div 6 = 9$ $42 \div 6 = 7$ Ans : 6	Q4	$304 \div 8 = 38$ $38 \times 5 = 190$
Q5	$72 \times 4 = 288$ 288-(75+89)=124 124-60=64	Q6	100%-35%=65% 65%-35%=30% $\frac{30}{100} \times 120 = 36$
Q7	$30 \times 20 \times 25 = 15000$ $15000 \div 800 = 18\ R\ 600$ Ans : 600	Q8	(a) 90+105+140+60+85=480 $\frac{90}{480} = \frac{3}{16}$ (b) $38 \times 5 = 190$ 190-140=50 5-3=2 $50 \div 2 = 25$
Q9	$(180-124) \div 2 = 28$ 180+28=208 360-208=152°	Q10	(a) 2 : 3 : 1 (b) $2 \times 2 = 4$ $4 \times 5 = 20$ 20+4=24 $216 \div 24 = 9$ $9 \times 4 = 36$
Q11	(a) $180 \div 3 = 60$ 63+60=123 180-123=57 60+94=154 180-154=26 180-(57+26)=97° (b) 180-97=83 180-83=97 180-(97+60)=23°	Q12	(a) 280-180=100 Ans : Friday (b) $15 \times 5 = 75$ $75 \times 23 = 1725$ $1725+(15 \times 2) = \$1755$
Q13	(a) 0.90+1.40=$2.30 (b) $2.30 \times 3 = 6.90$ 24.50-6.90=17.60 $17.60 \div 8 = 2.20$ 24.50+2.20+1.40=$28.10	Q14	10+8=18 $\frac{1}{2} \times 18 \times 10 = 90$ 90-34=56 $18 \times 18 = 324$ 324-56-56=212cm^2
Q15	42	Q16	(a) $\frac{3}{5} \times 320 = 192$ $\frac{3}{4} \times 192 = 144$ (b) 320-42-144=134 $\frac{3}{8} \times 320 = 120$ 134-120=14

Q17	(a) 16 , 40 (b) $12 \times 12 = 144$ (c) $10 \times 22 = 220$ Ans : 10		

END