Anglo-Chinese School
(Primary)

A Methodist Institution
(Founded 1886)

2020 SEMESTRAL ASSESSMENT 2
MATHEMATICS
PAPER 1 (BOOKLET A)
PRIMARY FIVE

Name: ( ) Class: Primary 5 ___

Date: 29 October 2020 Duration of Booklets A & B: 1 hour

INSTRUCTIONS TO CANDIDATES

1. This question paper consists of 9 printed pages, including the cover page.
2. Do not turn this page until you are told to do so.
3. Follow all instructions carefully.
4. Shade your answers on the Optical Answer Sheet (OAS) provided.
5. You are not allowed to use a calculator.

Questions 1 to 10 carry 1 mark each. Question 11 to 15 carry 2 marks each.
Make your choice (1, 2, 3 or 4). Shade the correct oval (1, 2, 3 or 4) on the Optical Answer Sheet (OAS).
(20 marks)

---

1. Express $\frac{17}{20}$ as a percentage.

   1) 17%
   2) 34%
   3) 68%
   4) 85%

2. Find the value of $350 - 24 \div 2 \times 4$.

   1) 302
   2) 347
   3) 652
   4) 1352

3. What is the area of triangle ABC?

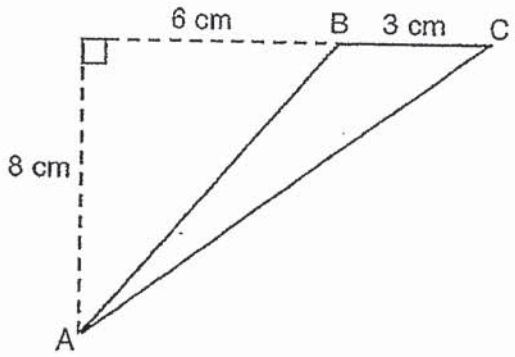

1) 12 cm^2
2) 24 cm^2
3) 36 cm^2
4) 72 cm^2

4. The mass of 70 cans of tuna weighs 10 500 g. What is the mass of 1 can of tuna?

1) 15 g
2) 105 g
3) 150 g
4) 1 050 g

5. Which of the following is the same as $\frac{13}{1000}$?

1) 1.3

2) 0.13

3) 0.013

4) 0.0013

6. Mrs Tan needs to book some buses for a school trip to the zoo. There are 242 pupils and teachers altogether. What is the least number of buses she needs to book if each bus can carry a maximum of 40 passengers?

1) 5

2) 6

3) 7

4) 8

7. Bob drinks $\frac{2}{7}$ ℓ of juice in a day. How much juice would Bob drink in 5 days?

1) $\frac{2}{35}$ ℓ

2) $1\frac{1}{7}$ ℓ

3) $1\frac{3}{7}$ ℓ

4) $5\frac{2}{7}$ ℓ

8. In the figure below, not drawn to scale, AD and EC are straight lines. Find $\angle y$.

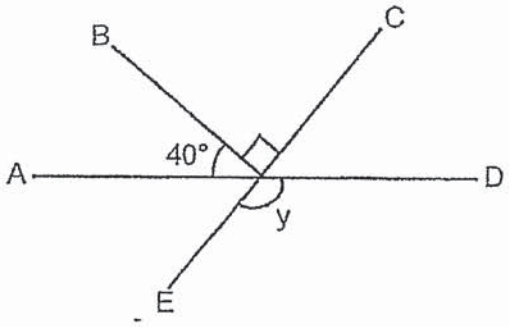

1) 40°
2) 50°
3) 130°
4) 140°

9. The average of 4 numbers is 34. The total of 3 of the numbers is 108. What is the fourth number?

1) 20
2) 28
3) 36
4) 74

10. There is a total of 50 red and blue cubes in a box. 15 of them are red cubes. What is the ratio of the number of blue cubes to the total number of cubes?

1) 3 : 7
2) 7 : 3
3) 3 : 10
4) 7 : 10

11. Mr Tan's car can travel 45 km on 5 ℓ of petrol. At this rate, how far can the car travel on 16 ℓ of petrol?

1) 135 km
2) 144 km
3) 160 km
4) 225 km

12. A rectangular container is filled with water to a depth of 6 cm. Alvin pours another 1.05 ℓ of water into the container. Find the volume of water in the container now.

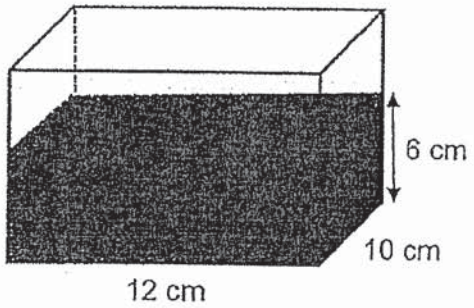

1) 1720 mℓ
2) 1725 mℓ
3) 1770 mℓ
4) 2220 mℓ

13. In the figure below, not drawn to scale, WZY is a straight line. XZ = XY = WZ and ∠XZY = 58°. Find ∠ZWX.

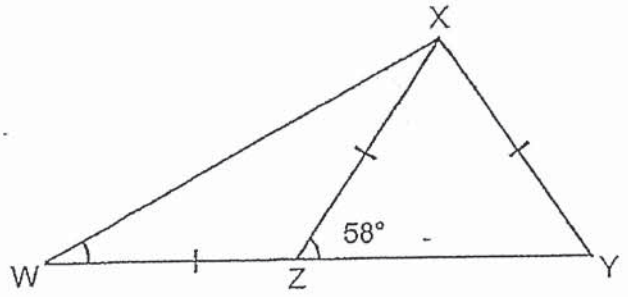

1) 29°
2) 58°
3) 64°
4) 122°

14. Peter, Quincy and Ron had some stamps. The ratio of the number of stamps Peter had to the number of stamps Ron had was 2 : 3. The number of stamps Quincy had to the number of stamps Ron had was 6 : 5. Find the ratio of the number of stamps that Peter had to the number of stamps Ron had to the number of stamps Quincy had.

1) 10 : 15 : 18
2) 10 : 18 : 15
3) 12 : 18 : 15
4) 12 : 15 : 18

15. Delia, Emma and Fiona sold some concert tickets. Fiona sold 4 times as many concert tickets as Emma. Fiona sold 150 concert tickets more than Emma. Delia and Fiona sold 355 concert tickets altogether. How many concert tickets did Delia sell?

1) 155
2) 205
3) 235
4) 305

Anglo-Chinese School (Primary)

A Methodist Institution
(Founded 1886)

2020 SEMESTRAL ASSESSMENT 2
MATHEMATICS
PAPER 1 (BOOKLET B)
PRIMARY FIVE

Name: _____ ( ) Class: Primary 5 _____

Date: 29 October 2020 Duration of Paper Booklets A & B: 1 hour

_____
Parent's/Guardian's signature

INSTRUCTIONS TO CANDIDATES

1. This question paper consists of 7 printed pages, including the cover page.
2. Do not turn this page until you are told to do so.
3. Follow all instructions carefully.
4. Answer all questions.
5. You are not allowed to use a calculator.

Section	Maximum Marks	Marks Obtained
Paper 1 Booklet A. Multiple-Choice Questions	20	
Paper 1 Booklet B. Short Answers: Part 1	5	
Paper 1 Booklet B. Short Answers: Part 2	20	
Total Marks	45	

Questions **16** to **20** carry 1 mark each. Write your answers in the spaces provided. Give your answers to the units stated and to its simplest form whenever necessary.

(5 marks)

16. What is the missing number?

625 478 = 600 000 + _____ + 5000 + 400 + 70 + 8

Answer: _____

17. Michael is 1.83 m tall. He is 24 cm taller than Fred. What is Fred's height?

Answer: _____ cm

18. Mrs Low bought $\frac{4}{5}$ kg of carrots. She cooked $\frac{2}{3}$ of them. How many kilograms of carrots did she cook?

Answer: _____ kg

19. A cupcake and 3 scones cost $7.50. The cupcake costs twice as much as a scone. How much do 4 scones cost?

Answer: $ _____

20. A florist sells 80 stalks of roses per day. At this rate, how many stalks of roses will she sell in a week?

Answer: _____

Questions 21 to 30 carry 2 marks each. Show all mathematical statements clearly in the space below each question and write your answers in the spaces provided. Give your answers to the units stated and to its simplest form whenever necessary.

(20 marks)

---

21. The ratio of the length of a rectangle to its breadth is 5 : 3. The breadth of the rectangle is 12 cm. Find the perimeter of the rectangle.

Answer: _____ cm

22. Mary spent 20% of her money and had $240 left. How much money did she spend?

Answer: $ _____

23. At a photocopying shop, the charges for the first 10 copies is $0.30 per copy. For every additional copy after the 1st 10 copies, it is charged at $0.15 per copy. Richard photocopied 40 copies of notes. How much did Richard pay?

Answer: $ _____

24. In the figure below, FOD and AOE are straight lines. ∠BOD is a right angle. ∠FOE = 124° and ∠COD = 36°. Find ∠AOB.

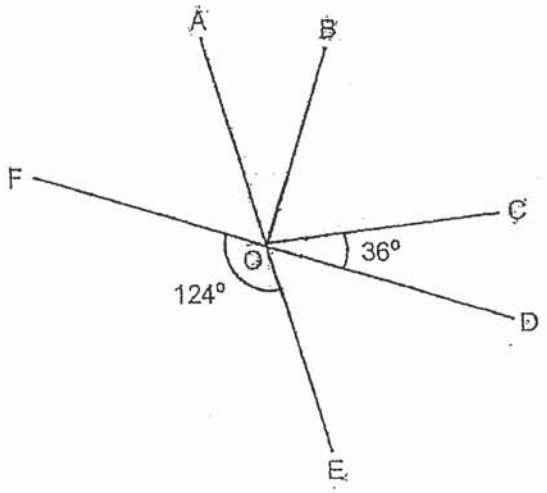

Answer: _____ °

25. 10 identical cubes were stacked one on top of the other. The height of the stack of cubes was 25.6 cm. After 4 cubes were removed, what was the height of the remaining stack of cubes?

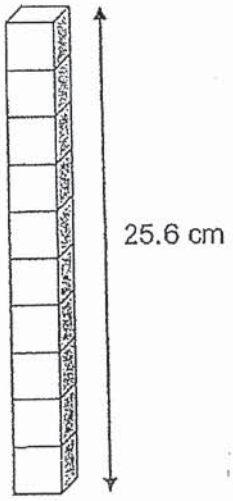

Answer: _____ cm

26. In the figure below, not drawn to scale, WZY is a straight line.

WXZ is an equilateral triangle. $\angle XYZ = 37°$. Find $\angle ZXY$.

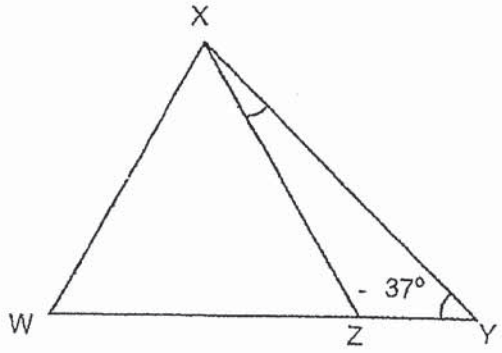

Answer: _____ °

27. The average mass of a few bags of rice is 20 kg. When another bag of rice with a mass of 30 kg is added, the average mass of the bags of rice increased to 22 kg. How many bags of rice were there at first?

Answer: _____

28. The cost of a printer, inclusive of 7% GST, is $428. What is the cost of the printer before GST?

Answer: $ _____

29. In the figure below, not drawn to scale, AD, BE and CE are straight lines. Find ∠p.

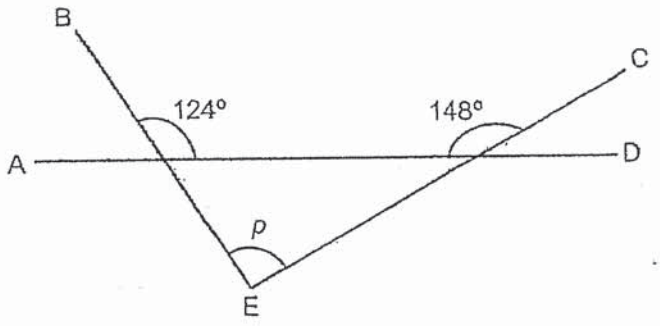

Answer: _____ °

30. George wanted to cut triangles as shown below from a rectangular piece of paper. The paper measured 52 cm by 30 cm, what is the maximum number of triangles that can be cut from it?

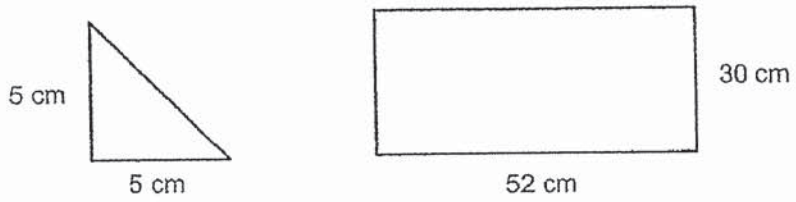

Answer: _____

Anglo-Chinese School (Primary)

A Methodist Institution
(Founded 1886)

2020 SEMESTRAL ASSESSMENT 2
MATHEMATICS
PAPER 2
PRIMARY FIVE

Name: _____ ( ) Class: Primary 5 _____

Date: 29 October 2020 Duration of Paper 2: 1 hour 30 minutes

_____
Parent's/Guardian's signature

INSTRUCTIONS TO CANDIDATES

1. This question paper consists of 15 printed pages, including the cover page.
2. Do not turn this page until you are told to do so.
3. Follow all instructions carefully.
4. Answer all questions.
5. You are allowed to use a calculator.

Section	Maximum Marks	Marks Obtained
Paper 2 Section A. Short Answers	10	
Paper 2 Section B. Problem Sums	45	
Total Marks	55	

Questions 1 to 5 carry 2 marks each. Show your mathematical statements clearly in the space provided for each question and write your answers in the spaces provided. Give your answers to the units stated and to its simplest form whenever necessary.

(10 marks)

---

1. A rectangular container measures 35 cm by 25 cm by 15 cm. It is filled to the brim with water. Tom poured out 6 ℓ 450 mℓ of the water from the container. How much water is left in the container? Give your answer in litres and millilitres.

Answer: _____ ℓ _____ mℓ

2. Sam has a rope measuring 8.36 m. He cut the rope into 4 equal pieces. How long is each piece of rope? Give your answer in metres and centimetres.

Answer: _____ m _____ cm

3. The solid below is made up of identical cubes. The length of each side of the cube is 1 cm. Find the volume of the solid.

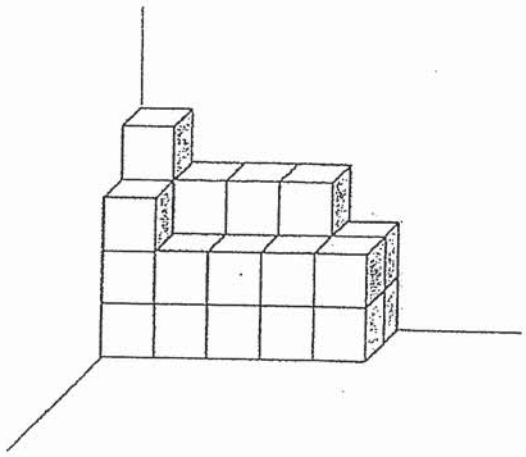

Answer: _____ cm^3

4. Zoe spent $\frac{5}{8}$ of her money on a pen and saved the rest. The amount she spent was \$66 more than the amount she saved. How much money did she save?

Answer: \$ _____

5. The overseas postage rates to two countries are shown below.

	Japan	Italy
1st 5kg	$30	$50
Every additional kg or part thereof	$5	$9

Harry sent a parcel weighing 4 kg to Japan and a parcel weighing 7.2 kg to Italy. How much did he pay altogether?

Answer: $ _____

For questions 6 to 17, show your mathematical statements clearly in the space provided for each question and write your answers in the spaces provided.
For questions which require units, give your answers in the units stated.
The number of marks available is shown in brackets [ ] at the end of each question or part-question.

(45 marks)

6. In the figure below, not drawn to scale, PUQ is a right-angled triangle.

QRS is an isosceles triangle. PQS and UQR are straight lines.

$\angle UPT = 35°$ and $\angle QRS = 72°$.

(a) Find $\angle RQS$.

(b) Find $\angle TPQ$.

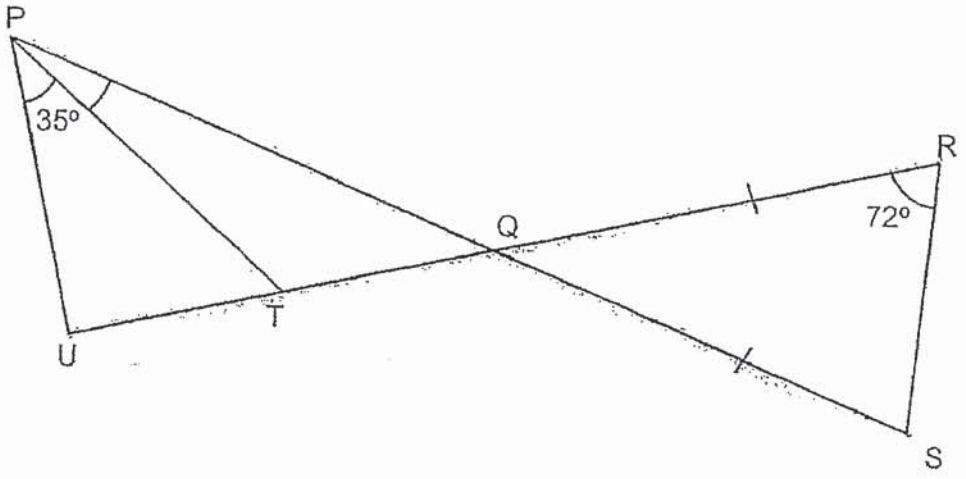

Answer: (a) _____ [1]

(b) _____ [2]

7. During a sale, 2 storybooks were sold for \$8.50 and 5 storybooks were sold for \$17.50. Tammy had \$55. She bought 14 storybooks and had some money left. What is the minimum amount of money Tammy spent?

Answer: _____ [3]

8. Mrs Tan has 20 kg of flour. She uses $\frac{1}{5}$ of it to bake some cakes. She uses $\frac{1}{4}$ kg to bake some tarts. How much flour does she have left?

Answer: _____ [3]

9. The diagram below is a solid figure.

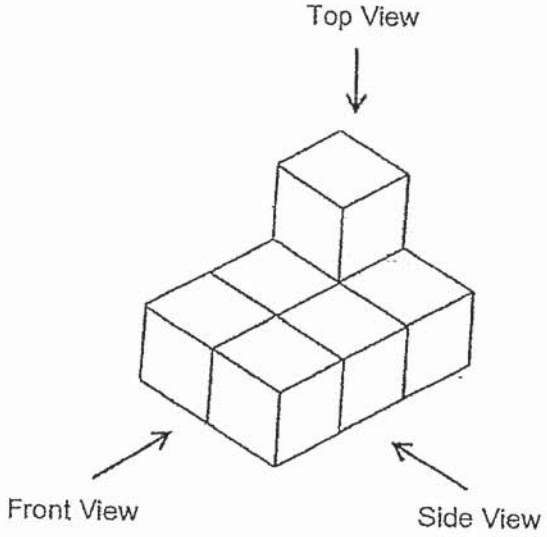

Draw the Top, Front and Side views of the solid figure below. [3]

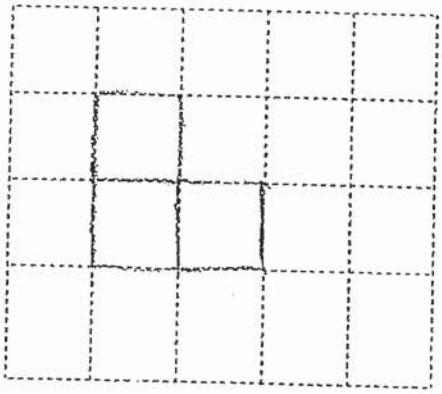

Front View

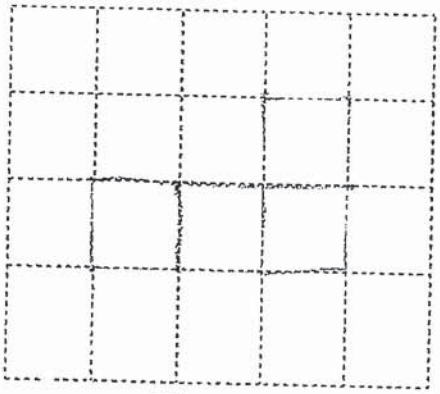

Side View

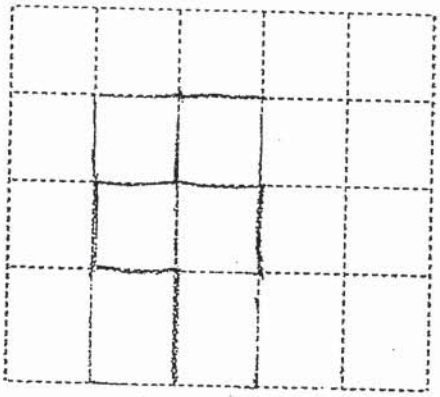

Top View

10. Ally paid $35.20 for a strawberry shortcake and 4 doughnuts.

Bel paid $50.80 for a strawberry shortcake and 10 doughnuts.

How much does a strawberry shortcake cost?

Answer: _____ [3]

11. Sally had some red, blue, green and white beads. 20% of the beads were red. She had 14 more blue beads than red beads. The number of green beads she had was twice the number of red beads. The remaining 29 beads were white.

(a) How many red beads did she have?

(b) How many more green beads did she have than blue beads?

Answer: (a) _____ [1]

(b) _____ [3]

12. Roy bought the same number of adult tickets and child tickets for a musical. He spent \$840 on the adult tickets and \$457.50 on the child tickets. Each adult ticket cost \$25.50 more than each child ticket. Find the total cost of 2 child tickets and 3 adult tickets.

Answer: _____ [4]

13. Ian spent $\frac{5}{8}$ of his money on a wallet and $\frac{2}{3}$ of the remainder on a book.

The book cost \$40.

(a) How much did the wallet cost?

(b) How much did Ian have at first?

Answer: (a) _____ [2]

(b) _____ [2]

14. The average mass of 3 boys, Andy, Brandon and Charles is 42 kg.
Andy is 3 kg lighter than Brandon. The total mass of Andy and Brandon is the same as the mass of Charles. What is the mass of Brandon?

Answer: _____ [4]

15. ABCG is a rectangle and DEFG is a square. Find the total area of the shaded parts.

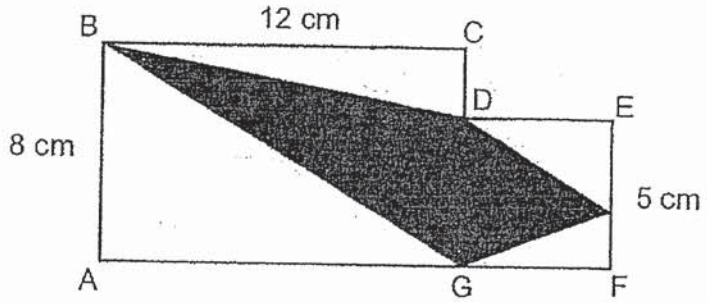

Answer: _____ [4]

16. The bar graph shows the number of muffins Mr Lee bought in 5 days.

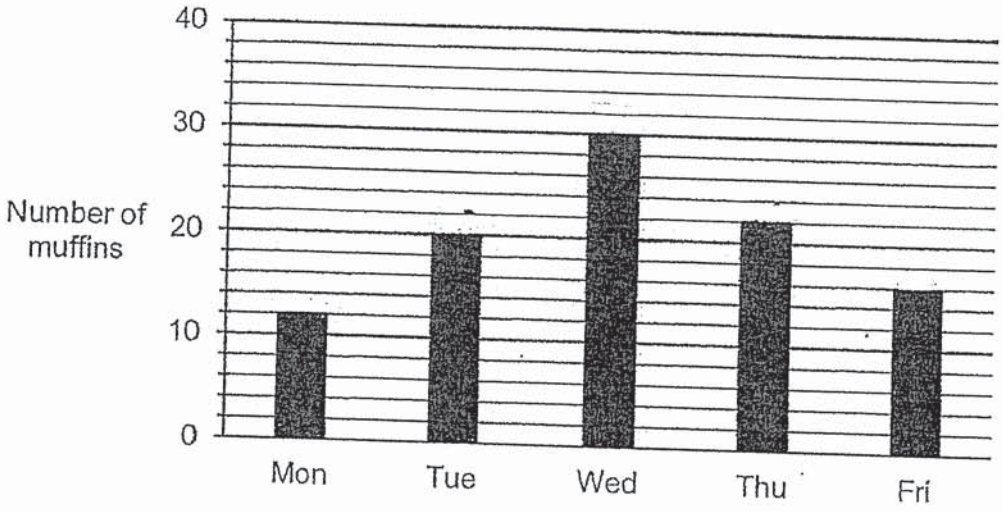

(a) How many muffins did Mr Lee buy from Monday to Friday?

(b) What was the average number of muffins Mr Lee bought per day from Tuesday to Thursday?

(c) Mr Lee paid $3.25 for each muffin. How much more did he pay for the muffins on Wednesday than on Monday?

Answer: (a) _____ [1]

(b) _____ [2]

(c) _____ [2]

17. Joy made patterns using circles and sticks as shown.

Pattern 1 Pattern 2 Pattern 3

(a) Complete the table.

Pattern Number	Number of Circles	Number of Sticks
1	1	4
2	2	6
3	3	8
4	4	10
6	6	(a) _____ [1]

(b) Joy made 24 circles. How many sticks did she use?

(c) Joy used 206 sticks. How many circles did she make?

Answer: (b) _____ [2]

(c) _____ [2]

- End of Paper -

ANSWER KEY

YEAR: 2020
LEVEL: PRIMARY 5
SCHOOL: ANGLO-CHINESE SCHOOL
SUBJECT: MATHEMATICS
TERM: SA2

BOOKLET A

Q1	4	Q2	1	Q3	1	Q4	3	Q5	3
Q6	3	Q7	3	Q8	3	Q9	2	Q10	4
Q11	2	Q12	3	Q13	1	Q14	1	Q15	1

BOOKLET B

Q16	20000
Q17	159cm
Q18	$\frac{8}{15}$.
Q19	\$6
Q20	80×7=560
Q21	12÷3=4 5+3=8 8×2=16 16×4=64
Q22	240÷80=3 3×20=60
Q23	\$0.30×10=\$3 \$0.15×30=\$4.50 \$4.50+\$3=\$7.50
Q24	124°-90°=34°
Q25	25.6÷10=2.56 2.56×6=15.36cm
Q26	180°-60°=120° 180°-120°-37°=23°
Q27	4
Q28	428÷107=4 4×100=400

KIASU ExamPaper Handmade Delivery | Whatsapp Only 88660031

Q29	180°-124°=56° 180°-148°=32° 180°-56°-32°=92°
Q30	10×6×2=120

BOOKLET C

Q1	35×15×25=13125ml 13125-6450=6675ml 6675ml=6L675ml
Q2	8.36m=836cm 836÷4=209cm 209cm=2.09m 2m 9 cm
Q3	10+10+5+1=26 26×1=26
Q4	66÷2=33 33×3=99
Q5	30+50+27=$107
Q6	180°-72°-72°=36° (a) 180°-90°-35°55° 180°-125°-36°=19° (b)
Q7	8.50×7=59.5 17.50+17.50+8.50+8.50=52 55-52=3 Ans: $52
Q8	$\frac{1}{5}$ ×20=4 20-4-$\frac{1}{4}$=15$\frac{3}{4}$
Q9	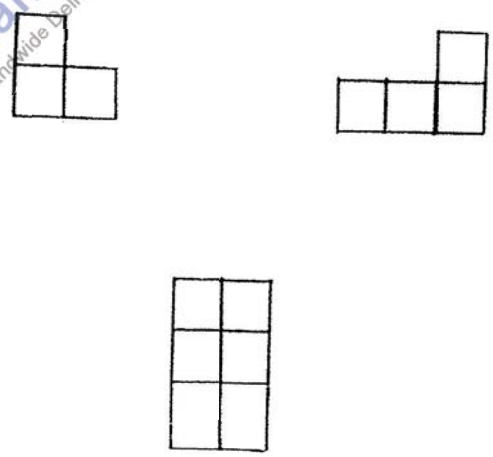

KIASU ExamPaper Islandwide Delivery | Whatsapp Only 88660031

Q10	50.80-35.20=15.60 15.60÷6=2.60 2.60×4=10.40 35.20-10.40=24.80
Q11	80%-20%-40%=20% 43÷20=2.15 2.15×40=86 2.15×20=43 (a) 43+14=57 86-57=29 (b)
Q12	840-457.50=382.50 382.50÷25.50=15 457.50÷15=30.50 30.50×2=61 168+61=229
Q13	40÷2=20 20×5=100 (a) 20×8=160 (b)
Q14	42×3=126 126-6=120 120÷4=30 30+3=33
Q15	5×5=25 12×8=96 96+25=121 ½×8×12=48 ½×12×3=18 96-48-18=30 ½×5×5=12.5 12.5+30=42.5cm2
Q16	a) 12+20+30+22+16=100 b) 20+30+22=72 72÷3=24 c) 30×3.25=97.50 12×3.25=39 97.50-39=58.50
Q17	a) 14 b) 24+2=26 24+26=50 c) 206-2=204 204÷2=102

KIASU ExamPaper Standard Delivery Whatsapp Only 88660031

END.